4'x8' Poster board

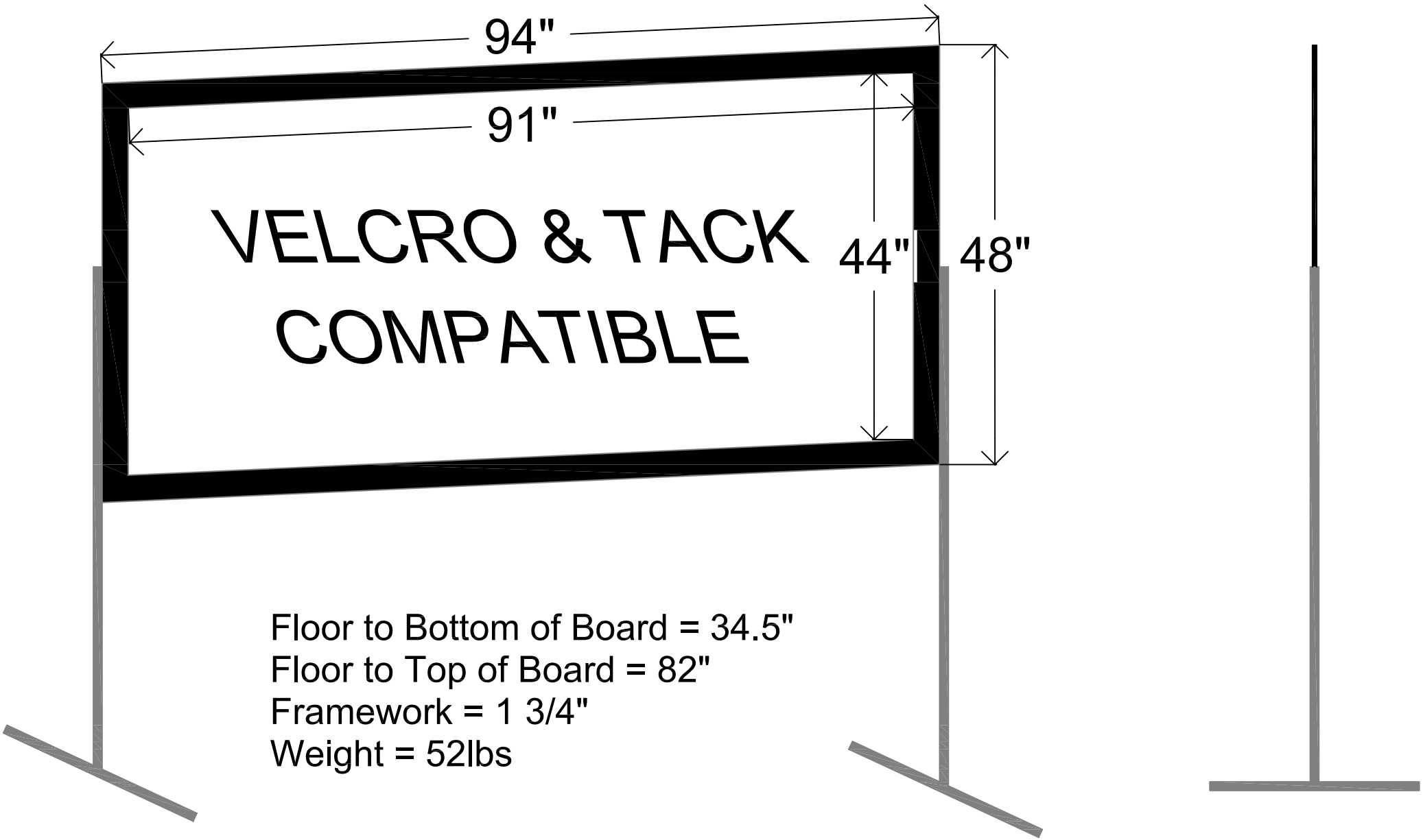

Floor to Bottom of Board = 34.5"
Floor to Top of Board = 82"
Framework = 1 3/4"
Weight = 52lbs